OWNER'S MANUAL
Operating and Servicing
Instructions

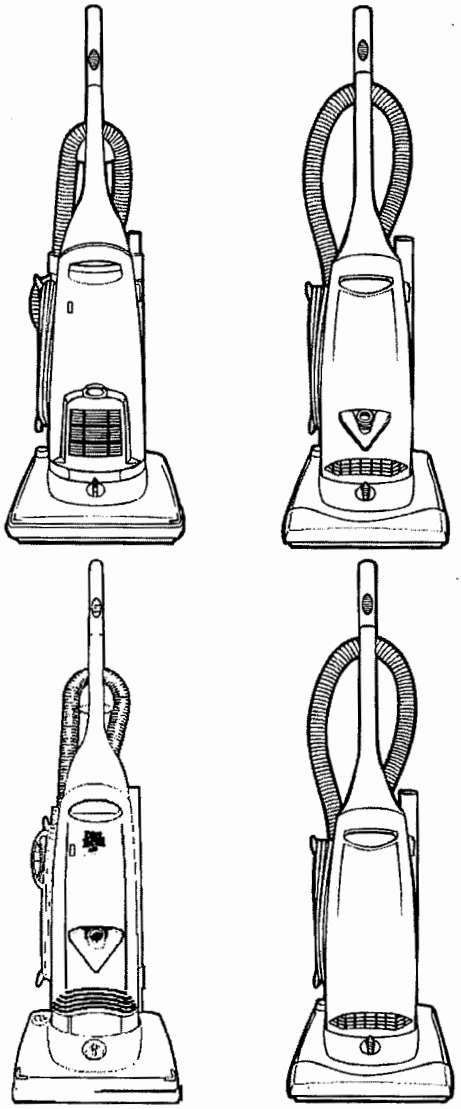

- Please read these instructions carefully before using your upright vacuum.
- Let us help you put your cleaner together or answer any questions, call:

  1-800-321-1134 (USA & Canada)
  www.dirtdevil.com

For quick reference, please record your vacuum information below.

Model #: _____

Mfg. Code: _____

(Mfg. code located on the lower backside of cleaner)

⚠ WARNING:

Cleaner assembly may include small parts. Small parts can present a choking hazard.

©1996 All rights reserved #1-1 13018-033
3/02

Español - página E1

CONGRATULATIONS

You are now the proud owner of the Dirt Devil® Swivel Glide®, the world's most maneuverable upright with patented Swivel Casters™ for effortless maneuvering on all types of floors. We trust your new purchase will bring you many hours of satisfaction.

Our company designed and developed this product with you in mind. We have included built-in tools and a powerful motor in a lightweight design for deep cleaning all household areas.

We are very proud of our products and hope that you are equally satisfied with their quality and performance.

Thank you for your support of Dirt Devil® products.
Visit our website at www.dirtdevil.com

TABLE OF CONTENTS

Features..... Page 4
How To Assemble..... Page 5
Hose Assembly and T ool Storage..... Page 5
How To Operate..... Page 6
Floor/Carpet Cleaning..... Page 6
Power Edge Cleaning..... Page 6
Above Floor Cleaning..... Page 6
Hide-a-Hose ®/Telescopic W and..... Page 6
Carpet Settings..... Page 6
Paper Bag Removal and Replacement..... Page 7
Filter Pads Removal and Replacement..... Page 7
How To Transport Cleaner..... Page 8
Belt or Brushroll Removal and Replacement..... Page 8
Lightbulb Removal and Replacement..... Page 8
Troubleshooting Guide..... Page 9

LIMITED WARRANTY

To the consumer, Royal Appliance Mfg. Co. warrants this vacuum cleaner to be free of defects in material or workmanship commencing upon the date of the original purchase. Refer to your vacuum cleaner carton for the length of warranty and save your original sales receipt to validate start of warranty period.

If the vacuum cleaner should become defective within the warranty period, we will repair or replace any defective parts free of charge. The complete machine must be delivered prepaid to any ROYAL® Authorized Sales & Warranty Service Station. Please include complete description of the problem, date of purchase, copy of original sales receipt and your name, address and telephone number. If you are not near a Warranty Station, call the factory for assistance in the USA & CANADA: 1-800-321-1134. Use only genuine Royal® replacement parts.

The warranty does not include unusual wear, damage resulting from accident or unreasonable use of the vacuum cleaner. This warranty does not cover belts, brushes, bags, filters, bulbs or fan damage. This warranty does not cover unauthorized repairs. This warranty gives you specific legal rights and you may also have other rights. (Other rights may vary from state to state in the USA).

THIS CLEANER IS INTENDED FOR HOUSEHOLD USE ONLY

IMPORTANT SAFETY INSTRUCTIONS

When you use an appliance, basic precautions should be followed, including the following:

- **READ ALL INSTRUCTIONS BEFORE USING THE APPLIANCE.**
- **ALWAYS FOLLOW THESE SAFETY INSTRUCTIONS.**
- **BRING CLEANER TO UPRIGHT POSITION WHEN USING THE HOSE AND ATTACHMENTS.**
- **DO NOT LEAVE CLEANER UNATTENDED WHEN PLUGGED IN.**
- **REGULARLY CHECK THE FILTERS AND SHAKE TO CLEAN OR REPLACE.**
- **WARNING: DO NOT USE SHARP OBJECTS TO CLEAN OUT THE HOSE SINCE THEY COULD CAUSE DAMAGE.**
- **OCCASIONALLY REMOVE BRUSH AND CLEAN DEBRIS FROM END CAPS TO KEEP BRUSH ROTATING SMOOTHLY.**
- **WARNING: THE CORDS, WIRES AND/OR CABLES SUPPLIED WITH THIS PRODUCT CONTAINS CHEMICALS, INCLUDING LEAD OR LEAD COMPOUNDS, KNOWN TO THE STATE OF CALIFORNIA TO CAUSE CANCER AND BIRTH DEFECTS OR OTHER REPRODUCTIVE HARM. WASH HANDS AFTER USING.**

READ ALL INSTRUCTIONS BEFORE USING THE APPLIANCE.

WARNING: TO REDUCE THE RISK OF FIRE, ELECTRIC SHOCK OR INJURY:

- Do not leave appliance when plugged in. Unplug from outlet when not in use and before servicing.
- Do not use outdoors or on wet surfaces. Electrical shock could occur.
- Do not allow to be used as a toy. Close attention is necessary when used by or near children.
- Use only as described in this manual. Use only manufacturer's recommended attachments.
- Do not use with damaged cord or plug. If appliance is not working as it should, has been dropped, damaged, left outdoors, or dropped into water, return it to a service center for inspection. Call 1-800-321-1134 for the nearest service center.
- Do not pull or carry by cord, use cord as handle, close a door on cord, or pull cord around sharp edges or corners. Do not run appliance over cord. Keep cord away from heated surfaces.
- Do not unplug by pulling on cord. To unplug, grasp the plug, not the cord.
- Do not handle plug or appliance with wet hands.
- Do not put any objects into openings. Do not use with any opening blocked; keep free of dust, lint, hair, and anything that may reduce air flow.
- Keep hair, loose clothing, fingers, and all parts of body away from openings and moving parts.
- Do not pick up anything that is burning or smoking, such as cigarettes, matches, or hot ashes.
- Do not use without dust bag and/or filters in place.
- Turn off all controls before unplugging.
- Use extra care when cleaning on stairs.
- Do not use to pick up flammable or combustible liquids, such as gasoline, or use in areas where they may be present.
- Keep the vacuum cleaner on the floor. Only the hand-held vacuum cleaners may be set on furniture.
- Cleaner must be in the upright position to lift the rotating brush off the carpet when doing above floor cleaning.
- Do not use an extension cord with this vacuum cleaner.
- Store the vacuum cleaner indoors. Put the vacuum cleaner away after use to prevent tripping accidents.
- Using improper voltage may result in damage to the motor and possible injury to the user. Proper voltage is listed on the cleaner plate.
- Only use attachments and hoses recommended by the manufacturer. Use the vacuum cleaner only as stated in this manual.

SAVE THESE INSTRUCTIONS

WARNING:

To reduce the risk of electric shock, this appliance has a polarized plug (one blade wider than the other). This plug will fit in a polarized outlet only one way. If the plug does not fit fully in the outlet, reverse the plug. If it still does not fit, contact a qualified electrician to install the proper outlet. Do not change the plug in any way.

Your cleaner contains a Clog Indicator Light (located on the back panel) that indicates a clog in your vacuum has caused the motor to shut off to avoid overheating. If this happens, turn switch off and unplug the cleaner. Inspect the exhaust, inlet, hose, and filters for any blockage. Change bag if full. After approximately 30 minutes the motor will have cooled and the vacuum will be ready to use.

NOTE: ***The cleaner must remain unplugged during the 30 minute cooling period.***

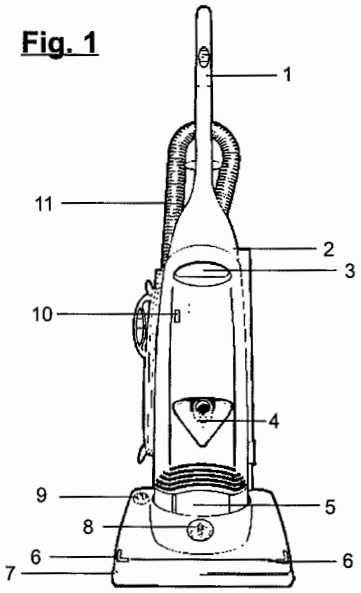

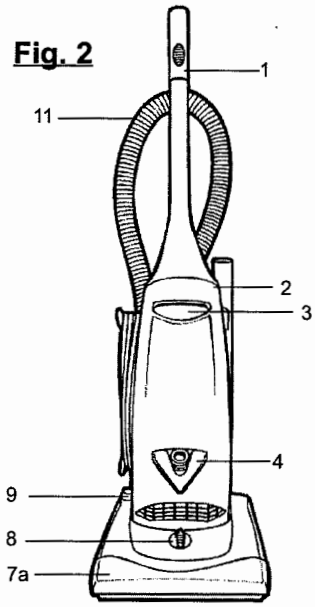

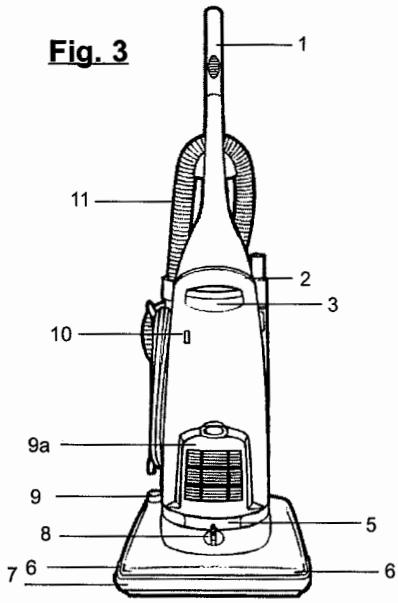

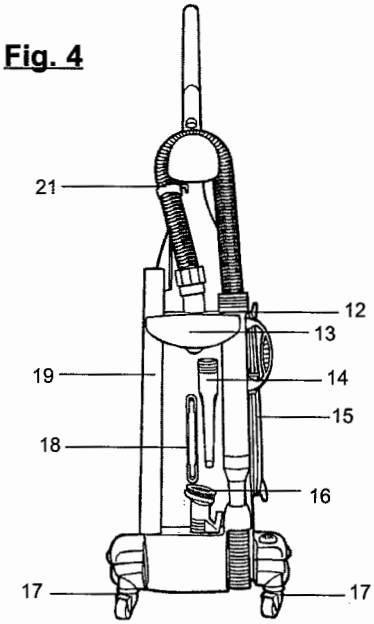

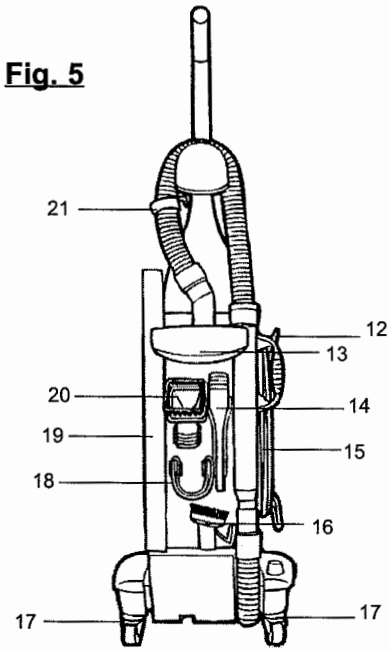

FEATURES

1. Non-slip grip™ handle
2. On/Off Switch
3. Front Panel Release Lever
4. *Edge Wedge™ Tool / Upholstery Tool
5. *Headlight
6. *Power Edger™ slots
7. *Wrap Around Bumper

7a. *Scuff Guard™ Bumper

8. Carpet Height Adjust Knob
9. Release Pedal

9a. *Filter Cage

10. *Full Bag Indicator
11. Hose
12. Quick Cord Release Hook
13. Carrying Handle
14. Crevice Tool
15. Long Power Cord
16. *Power Edger
17. Swivel Casters™
18. Belt Storage
19. Extension Wand
20. *2-in-1 Tool: Dusting brush/Upholstery tool
21. *Hose Anchor

Not available on all models

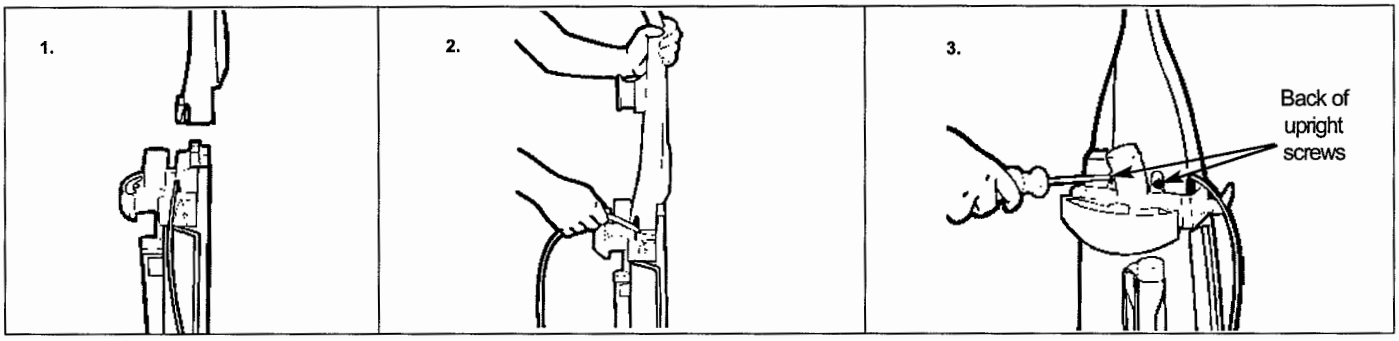

HOW TO ASSEMBLE

TOOL REQUIRED: PHILLIPS SCREWDRIVER

1. Stand unit in upright position and place upper handle onto upright (Diagram 1).
2. Hold cord down and out of the way to avoid pinching. P ush upper handle onto upright, aligning on/off switch with handle ope ning (Diagram 2).
3. BACK OF UPRIGHT: add **TWO** screws (supplied) to secure handle (Diagram 3).

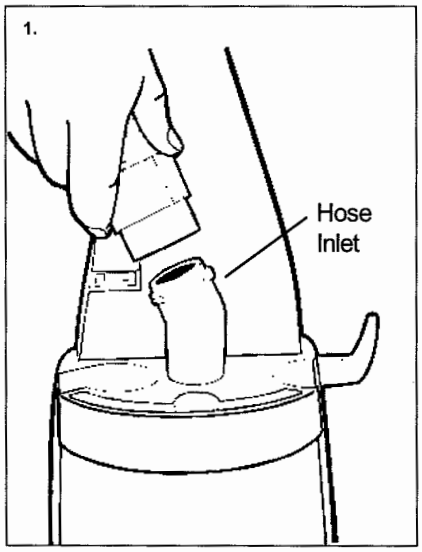

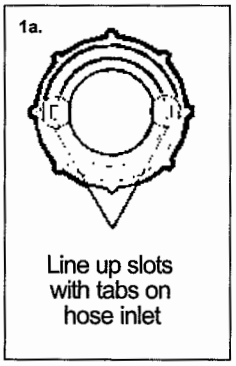

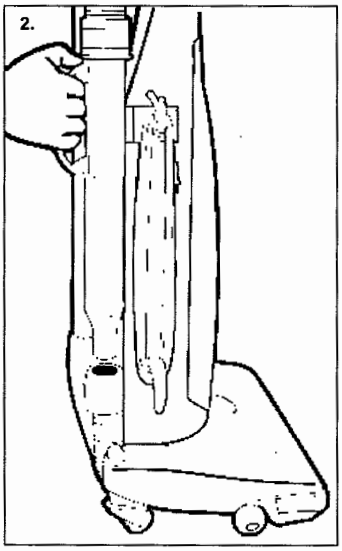

HOSE ASSEMBLY AND TOOL STORAGE

1. **ATTACH HOSE**: Attach the flexible hose to the cleaner (Diagram 1). Match the long arrow on the cuff to the arrow on the inlet (Diagram 1a). Push down firmly on the cuff and turn clockwise. Insert the hose handle into the side of the cleaner. Press down firmly to secure (Diagram 2).
2. **ATTACH TOOLS**: Refer to page 4 (Fig. 4 or 5) for tool placement.
3. **CORD STORAGE:** For tidy cord storage, wrap cord around hooks on side of cleaner with quick cord release (Diagram 2).

Not available on all models

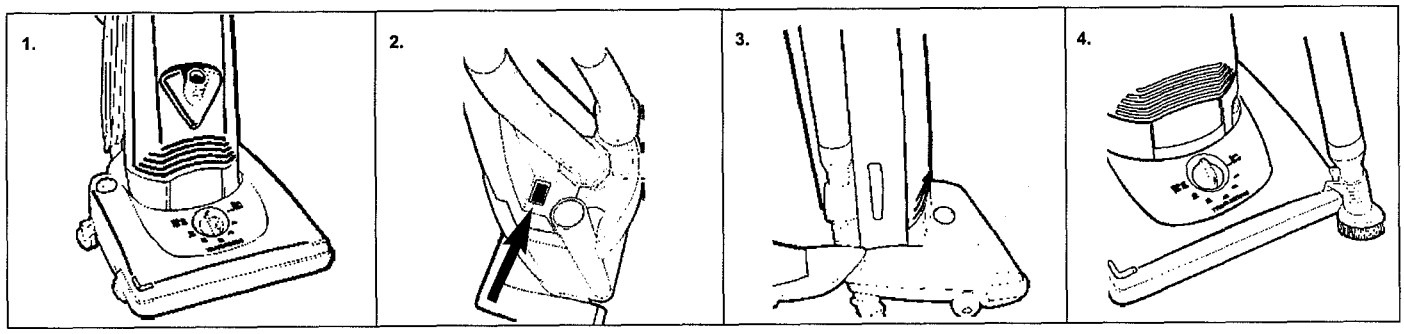

CARPET SETTINGS

NOTE: *The cleaner may be in the upright or operating position to adjust carpet setting.*

1. **Adjusting in the upright position:** Rotate the knob to the desired setting. **NOTE:** *The knob will rotate easily.* Your setting is working (Diagram 1).Once the carpet setting is selected, and the cleaner placed in the operating position, the setting will be in the c orrect position.
2. **Adjusting in the operating position:** Rotate the knob to the desired setting. **NOTE:** *The knob will rotate with some resistance.* The nozzle will raise and lower as the knob is rotated.

HOW TO OPERATE

1. Plug cord into electrical outlet.
2. Turn cleaner "on". Power pedal located on left side of back of unit (Diagram 2).
3. With foot, depress the handle release pedal on the right side of the cleaning nozzle (Diagram 3).

NOTE: *Rotating brush could cause area rug fringe to become tangled within cleaner. Use caution when vacuuming throw rugs with fringe.*

***FOR POWER EDGE™ CLEANING:** Remove Power Edger ™ from lower back panel. Insert Power Edger ™ into desired Power Edger ™ slot. Remove hose end from side of unit and hose caddy. Slide hose end onto Power Edger ™. Glide the upright against walls and baseboards for superior edge cleaning (Diagram 4).

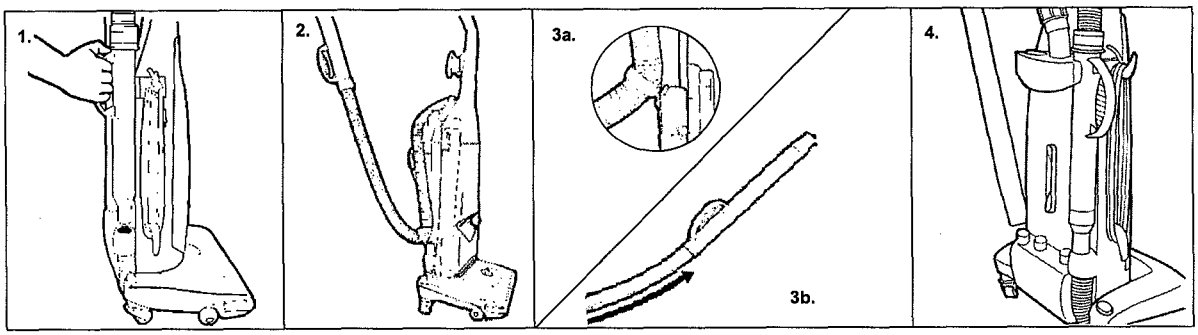

ABOVE FLOOR CLEANING

Cleaner must be in the upright position to lift the rotating brush off the carpet when cleaning above the floor.

1. Put cleaner in its upright position.
2. Remove the hose from the side of the cleaner using the handle (Diagram 1).
3. Choose any of the handy accessories or use the hose alone. Simply push the attachment firmly onto the end of the wand or hose handle. To remove tool, twist and pull apart gently.

*4. If additional length is needed use the Extension wand.

***STRETCH HOSE® AND HOSE ANCHOR:** The Hose Anchor is used to prevent the vacuum from tipping while using the above floor cleaning attachments. Remove the hose from the side of the cleaner using the handle. Lay hose over the back of the cleaner (Diagram 2) and secure hose anchor ring (Diagram 3a) located around hose to base. Pull hose from hose handle for additional length (Diag ram 3b).

EXTENSION WAND: Remove wand from side of cleaner by pulling out at the top to unsnap and pull up (Diagram 4).

****Not available on all models***

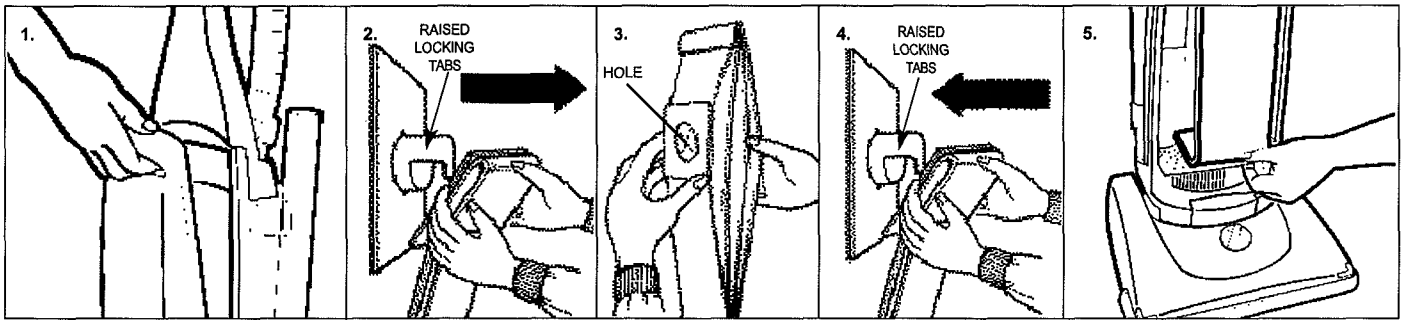

PAPER BAG REMOVAL & REPLACEMENT

BAG TYPE: U

NOTE: *Unplug cleaner before changing paper bag. Cleaner must have paper bag in place at all times.*
You can tell your bag needs replacing when you experience less suction when the *full bag indicator changes to yellow or if the clog indicator light illuminates (see pg. 3). Do not exceed marked fill line on paper bag. Different types of dirt may require bag replaceme nt more often.

*** FULL BAG INDICATOR** When the full bag indicator window changes to yellow, it may be time for a new paper bag. Check the paper bag, and if full, replace as described below. If not, the cleaner may have a clogged dirt passage (see "T rouble Shooting" pg. 9).

TO REMOVE OLD BAG

1. Pull release lever on front panel to remove front panel (Diagram 1). 2. **REMOVE:** Grasp cardboard collar of paper bag with both hands and pull past raised locking tabs on the dirt tube (Diagram 2). Dispose of old paper bag.

TO INSTALL NEW BAG

IMPORTANT: Expand bag away from hole before installing (Diagram 3). Press in opening to clear paper away from hole. 1. Grip cardboard collar and push past raised locking tabs on dirt tube with both hands (Diagram 4). 2. Fold bag inward about 3" from bottom to r est on top of bag support posts (Diagram 5). Reattach front panel.

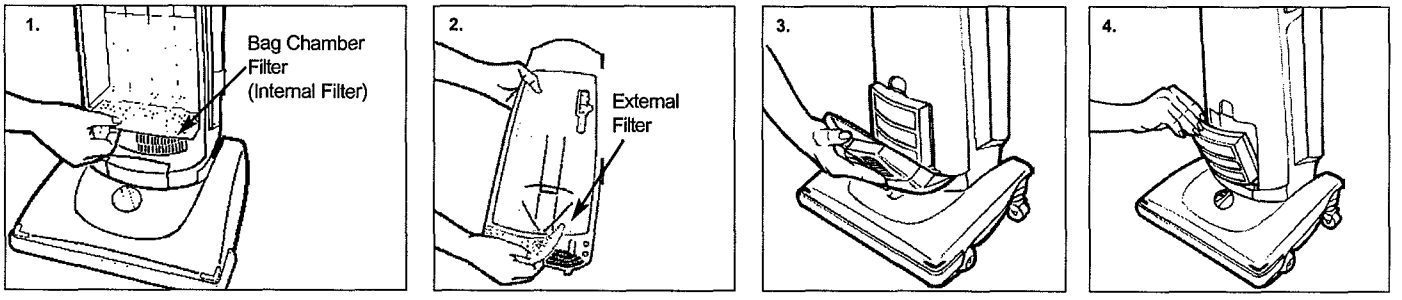

FILTER PADS REMOVAL & REPLACEMENT Unplug cleaner before changing filter.

This upright contains two filters: internal filter (Bag Chamber) and external filter (Front Panel). (Filter placement varies a ccording to model) Diagram 2: filter placement is inside front panel. Diagram 4: filter placement is outside front panel. For filter repla cement call 1-800-321-1134. External and bag chamber filter part # 3-863001-001. Front panel and bag chamber filter part # 3-865132-044.

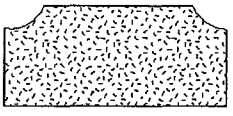

BAG CHAMBER FILTER (internal)
located under paper bag. Filter should be replaced after every third paper bag.

1. Remove front panel.
2. Lift up on front edge and pull towards you to remove (Diagram 1). Dispose of filter.
3. Slide new filter pad into position.
4. Reattach front panel.

***EXTERNAL FILTER** (external)
located on back of front panel. Filter should be replaced after every third paper bag.

1. Position filter to fit (Diagram 2).
2. Push over 6 posts.

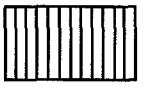

***FRONT PANEL FILTER** (external)
located on front panel. Filter should be replaced once a year.

1. Remove filter cover by depressing center tab (Diagram 3).
2. Remove and replace filter (Diagram 4).

****Not available on all models***

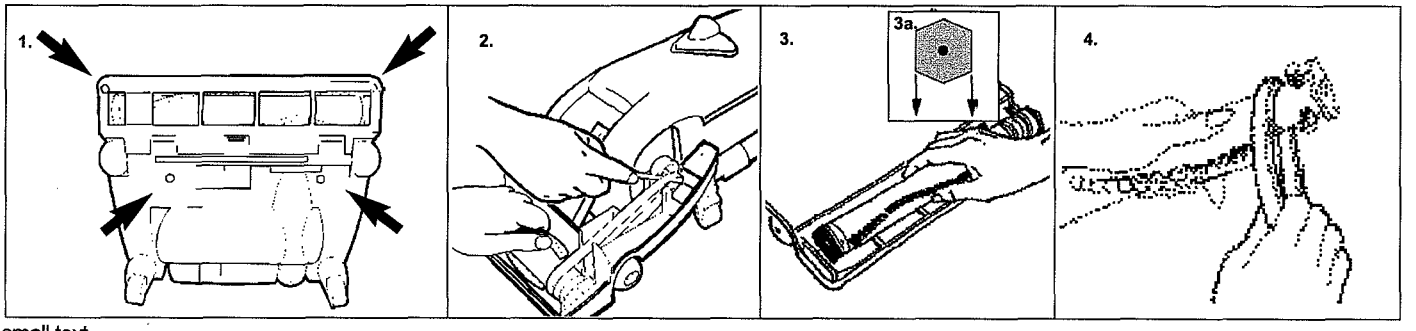

small text

BELT OR BRUSH REMOVAL & REPLACEMENT

BELT STYLE: 4 & 5

TOOL REQUIRED: PHILLIPS SCREWDRIVER

WARNING: TO REDUCE THE RISK OF INJURY FROM MOVING PARTS - UNPLUG CLEANER BEFORE CHANGING BEL T OR BRUSHROLL.

SUB-HEADING

TO REMOVE BELT Flip cleaner to expose nozzle base as shown in (Diagram 1). To remove nozzle cover, use Phillips screwdriver to remove the four screws. Arrows in diagram 1 show location of screws. Flip cleaner back over and lift nozzle cover off. Slid e belt off motor shaft (Diagram 2). Lift and remove brushroll (Diagram 3). Dispose of old belt.

callouts

TO REPLACE BELT

1. Place belt on motor shaft, then slip brushroll through belt. Place belt in area of brushroll without bristles (Diagram 4).
2. With belt in place, pull and slide brushroll into nozzle (Diagram 3) making sure that the brushroll end caps are in the cor rect orientation (Diagram 3a inset).
   IMPORTANT: Rotate brushroll manually in both directions to make sure belt is not twisted and is properly aligned.
3. Reattach nozzle cover. Secure by replacing the screws under the nozzle base.

BELT STORAGE

See page 4. (fig. 4) - stretch belt around hooks. (fig. 5) - fold and secure belt (in a u shape) on the inside of the loops on the back of the upright.

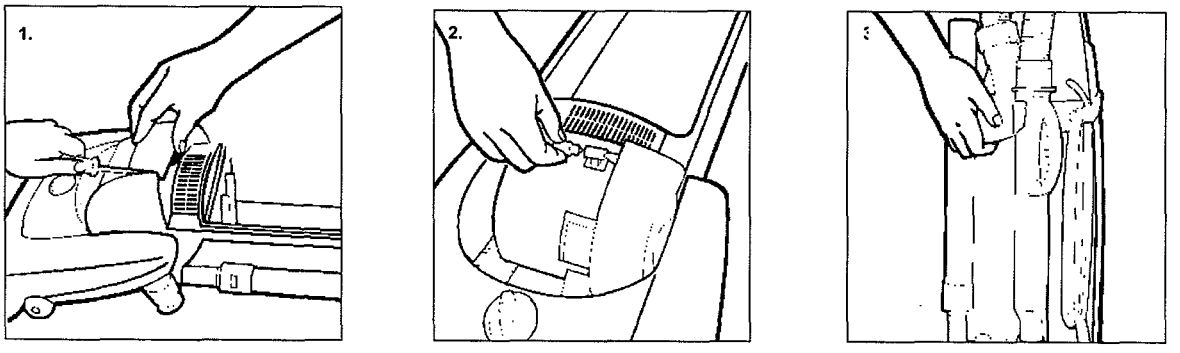

LIGHTBULB* REMOVAL & REPLACEMENT

TOOL REQUIRED: FLATHEAD SCREWDRIVER

WARNING: TO REDUCE THE RISK OF ELECTRIC SHOCK - UNPLUG CLEANER BEFORE REMOVING OR REPLACING LIGHTBULB.

This cleaner uses a common automotive lamp #906, 13.0 volts. For bulb replacement call 1-800-321-1 134 or your local auto parts store.

1. Remove front panel (See page 9, Diagram 1). Lean cleaner handle back. Insert end of standard screwdriver into the side slot a nd pry outward to pop headlight lens out.
2. Pull bulb out of socket to remove. Push bulb into socket to replace (Diagram 2).
3. Snap headlight lens panel back into place. Reattach front panel.

HOW TO TRANSPORT CLEANER

Use the carrying handle on the back of the cleaner to move cleaner from room to room (Diagram 3).

NOTE: *Do not push cleaner forward while leaning on back casters, pull cleaner on back casters, or attempt to lift cleaner using upper handle.*

**** Not available on all models***

TROUBLESHOOTING GUIDE

IMPORTANT: UNPLUG CLEANER BEFORE SERVICING

Problem	Possible Reasons	Possible Solutions
Cleaner won't run	1. Power cord not firmly plugged into outlet. 2. Blown fuse or tripped breaker. 3. Needs service. 4. Motor Protector tripped.	1. Plug unit in firmly. 2. Check fuse or breaker in home. Replace fuse/reset breaker. 3. Take to service center or call 1-800-321-1 134. 4. Clog indicator light - Pg. 3.
Cleaner won't pick-up or low suction OR	1. Paper bag is not opened. 2. Paper bag full. 3. Brushroll worn. 4. Broken or worn belt. 5. Clogged filter pad. 6. Nozzle/dirt passage clogged. 7. Carpet height setting is incorrect. 8. No paper bag. 9. Bag inlet clogged.	1. Insert finger into hole and push paper away from opening. 2. Replace paper bag - Pg. 7. 3. Replace brushroll- Pg. 8. 4. Replace belt - Pg. 8. 5. Replace filter - Pg. 7. 6. Remove base nozzle cover - Pg. 8; remove obstruction Remove hose; remove obstruction - Pg. 5. 7. Set carpet height adjustment to appropriate setting for carpet being cleaned - Pg. 6. 8. Clean filter & install bag - Pg. 7. 9. Remove hose & paper bag and clean inlet - Pg. 3, 7.
Dust escaping from cleaner	1. Paper bag full. 2. Bag not installed correctly. 3. Puncture/hole in paper bag. 4. No bag in cleaner. 5.	1. Replace paper bag - Pg. 7. 2. R eview paper bag installation - Pg. 7. 3. Replace paper bag - Pg.7. Clean/Replace Filter - Pg. 7. 4. Install bag & clean filter - Pg. 7. Hose not installed correctly. 5. Review Hose
Installation - Pg. 5.		
Cleaner tools won't pick up	1. Hose clogged. 2. Bag inlet clogged. 3. Paper bag full. 4. No bag in cleaner , filter clogged.	1. Remove hose and tools; remove obstruction - Pg. 3. 2. Remove hose & paper bag and clean inlet - Pg. 3, 7. 3. Replace paper bag - Pg. 7. 4. Install paper bag & clean filter - Pg. 7.
Headlight not working	1. Bulb burnt out. 2. Loose electrical wires.	1. Replace bulb - Pg. 8. 2. Call 1-800-321-1 134 for nearest authorized Royal ® Dealer.
Cleaner is difficult to push	1. Carpet height setting is incorrect	1. Set carpet height adjustment to appropriate setting for carpet being cleaned - Pg. 6.
Belt burns or breaks	1. Brush may be jammed with debris. 2. Brush end caps are clogged with debris. 3. Carpet Height Setting is incorrect.	1. Remove brush - Pg. 8. Clean brush of debris. 2. Remove brush. Determine if end caps rotate freely. If not, replace brushroll - Pg. 8. 3. Set Carpet Height adjustment to appropriate setting for carpet being cleaned - Pg. 6.

ANY OTHER SERVICING SHOULD BE DONE BY AN AUTHORIZED SERVICE REPRESENTATIVE

CUSTOMER SERVICE (1-800-321-1134)

In the event that further assistance is required, see your Yellow Pages for an authorized Royal ® Dealer. Costs of any transportation to and from any place of repair are to be paid by the owner. The service parts used in this unit are easily replaced and readily available from an authorized Royal® Dealer or retailer. Always identify your cleaner by the model number and manufacturing code when requesting information or or dering replacement parts. (The model number appears on the back of the cleaner.)